FLORIDA PRODUCT APPROVAL #21632

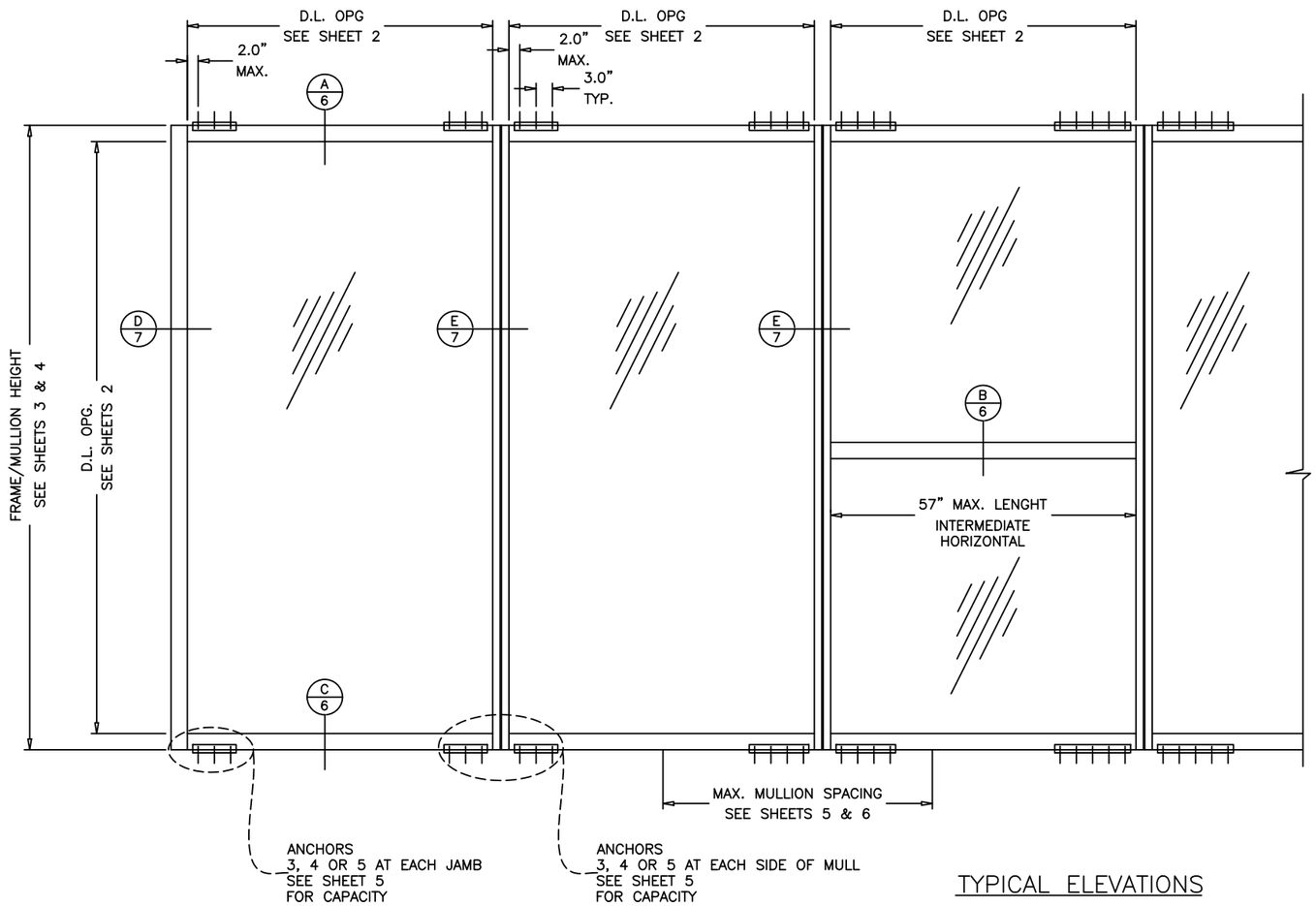

TYPICAL ELEVATIONS

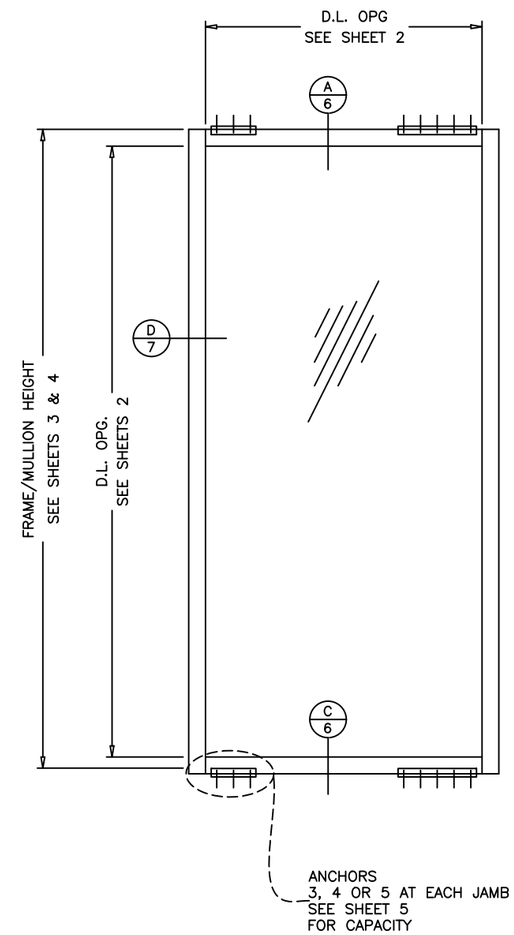

SINGLE 'O' PANEL:

FRAME WITH = D.L.O. WIDTH + 6.0"
FRAME HEIGHT = D.L.O. HEIGHT + 6.0"

SERIES 1050 ALUMINUM WINDOW WALL SYSTEM

THIS PRODUCT HAS BEEN DESIGNED AND TESTED TO COMPLY WITH THE REQUIREMENTS OF THE FLORIDA BUILDING CODE INCLUDING HIGH VELOCITY HURRICANE ZONE (HVHZ).

1BY OR 2BY WOOD BUCKS & BUCK FASTENERS BY OTHERS, MUST BE DESIGNED AND INSTALLED ADEQUATELY TO TRANSFER APPLIED PRODUCT LOADS TO THE BUILDING STRUCTURE.

ANCHORS SHALL BE CORROSION RESISTANT AS LISTED, SPACED AS SHOWN ON DETAILS AND INSTALLED PER MANUF'S INSTRUCTIONS. SPECIFIED EMBEDMENT TO BASE MATERIAL SHALL BE BEYOND WALL DRESSING OR STUCCO.

A LOAD DURATION INCREASE IS USED IN DESIGN OF ANCHORS INTO WOOD ONLY.

ALL SHIMS TO BE HIGH IMPACT, NON–METALLIC AND NON–COMPRESSIBLE.

MATERIALS INCLUDING BUT NOT LIMITED TO STEEL/METAL SCREWS, THAT COME INTO CONTACT WITH OTHER DISSIMILAR MATERIALS SHALL MEET THE REQUIREMENTS OF THE FLORIDA BUILDING CODE.

THIS PRODUCT APPROVAL IS GENERIC AND DOES NOT PROVIDE INFORMATION FOR A SITE SPECIFIC PROJECT, i.e. LIFE SAFETY OF THIS PRODUCT, ADEQUACY OF STRUCTURE RECEIVING THIS PRODUCT AND SEALING AROUND OPENING FOR WATER INFILTRATION RESISTANCE ETC.
CONDITIONS NOT SHOWN IN THIS DRAWING ARE TO BE ANALYZED SEPARATELY, AND TO BE REVIEWED BY BUILDING OFFICIAL.
DESIGN LOADS SHOWN ARE BASED ON 'ALLOWABLE STRESS DESIGN (ASD)'.

INSTRUCTIONS:

USE CHARTS AS FOLLOWS.

STEP 1 DETERMINE DESIGN WIND LOAD REQUIREMENT BASED ON WIND VELOCITY, BLDG. HEIGHT, WIND ZONE USING APPLICABLE ASCE 7 STANDARD.

STEP 2 SEE CHARTS ON SHEET 2 FOR GLASS DESIGN LOAD CAPACITY.

STEP 3 CHECK MULLION DESIGN LOAD CAPACITY FOR A GIVEN SPACING AND HEIGHT USING CHARTS ON SHEET 3 & 4 THE CAPACITY SHOULD EXCEED THE DESIGN LOAD.

STEP 4 USING CHARTS ON SHEET 5 SELECT ANCHOR OPTION WITH DESIGN RATING MORE THAN DESIGN LOAD SPECIFIED IN STEP 1 ABOVE.

STEP 5 FOR JAMBS, USING SHEET 7, DETERMINE THE MIN. & MAX. GAP DIMENSIONS.

STEP 6 THE LOWEST VALUE RESULTING FROM STEPS 2, 3, 4 AND 5 THAT EXCEED THE DESIGN WIND PRESSURE DETERMINED THRU STEP 1 SHALL APPLY TO ENTIRE SYSTEM.

THIS SYSTEM IS RATED FOR SMALL MISSILE IMPACT.
F.B.C APPROVED IMPACT RESISTANT SHUTTERS REQUIRED FOR INSTALLATIONS UP TO 30 FT. OF GRADE.
SHUTTERS NOT REQUIRED FOR INSTALLATIONS ABOVE 30 FT. OF GRADE.

PRODUCT COMPLIES WITH REQUIREMENT OF ANSI Z97.1

LAMINATED GLASS
SMALL MISSILE IMPACT

Revision:

PREPARED BY A. LYNN MILLER
1070 TECHNOLOGY DRIVE
N. VENICE, FL 34275
(941) 480-1600
REGISTRATION #29296

eco window systems
ECO WINDOW SYSTEMS, LLC.
8502 N.W. 80th ST. MEDLEY, FL 33166
TEL. (305) 885-5299 FAX. (305) 885-5902

Series	Sheet	DWG No.	Drawn By	Date	Rev.
SERIES 1050	1 OF 9	WW1050FPA - SMI	A.M.	8/26/2022	A

Desc.: GENERAL INFORMATION & ELEVATION

Title: SERIES 1050 ALUM. WINDOW WALL SYSTEM (S.M.I.)

ANTHONY LYNN MILLER
LICENSE
No. 58705
10/03/22
STATE OF FLORIDA
PROFESSIONAL ENGINEER

A. LYNN MILLER, P.E.
P.E.# 58705

GLASS DESIGN LOAD CAPACITY – PSF			
NOMINAL DIMS.		9/16" LAM. GLASS	
D.L.O. WIDTH	D.L.O. HEIGHT	POS. (+)	NEG. (-)
36"	78"	100.0	140.0
42"		100.0	140.0
48"		100.0	140.0
54"		100.0	137.2
60"		95.0	123.5
66"		86.4	112.3
72"		79.2	102.9
78"		73.1	95.0
81"		73.1	95.0
36"	90"	100.0	140.0
42"		100.0	140.0
48"		100.0	140.0
54"		100.0	137.2
60"		95.0	123.5
66"		86.4	112.3
72"		79.2	102.9
36"	102"	100.0	140.0
42"		100.0	140.0
48"		100.0	140.0
54"		100.0	137.2
60"		95.0	123.5
63"		90.5	117.6
36"	114"	100.0	140.0
42"		100.0	140.0
48"		100.0	140.0
54"		100.0	134.9
57"		100.0	130.0
36"	126"	100.0	140.0
42"		100.0	140.0
48"		100.0	140.0
36"	138"	100.0	140.0
42"		100.0	140.0
45"		100.0	140.0

INTERPOLATION BETWEEN WIDTHS OR HEIGHTS ALLOWED.

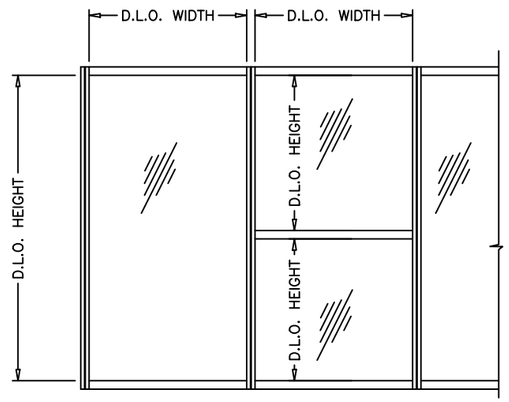

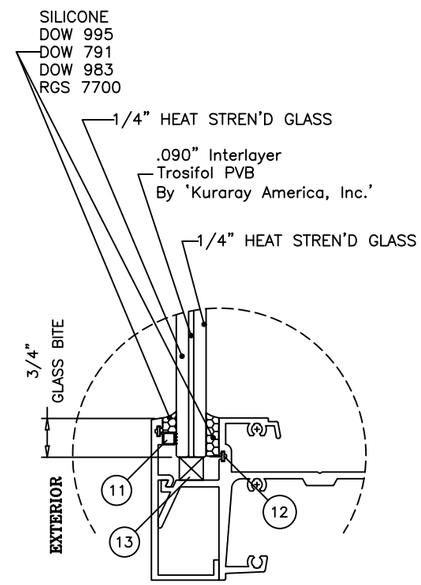

GLASS DETAIL

9/16" OVERALL LAM. GLASS

NOTE:
GLASS CAPACITIES ON THIS SHEET ARE BASED ON ASTM E1300–09 (3 SEC. GUSTS).

Revision:

PREPARED BY A. LYNN MILLER
1070 TECHNOLOGY DRIVE
N. VENICE, FL 34275
(941) 480-1600
REGISTRATION #29296

ECO window systems
ECO WINDOW SYSTEMS, LLC.
8502 N.W. 80th ST. MEDLEY, FL 33166
TEL. (305) 885-5299 FAX. (305) 885-5902

Series	Desc.	Title
SERIES 1050	DESIGN LOAD CAPACITY & GLAZING DETAIL	SERIES 1050 ALUM. WINDOW WALL SYSTEM (S.M.I.)

Sheet	DWG No.	Drawn By	Date	Rev.
2 OF 9	WW1050FPA - SMI	A.M.	8/26/2022	A

ANTHONY LYNN MILLER
LICENSE
No. 58705
STATE OF FLORIDA
PROFESSIONAL ENGINEER
10/03/22

A. LYNN MILLER, P.E.
P.E.# 58705

JAMB & MULLION LOAD CAPACITY – PSF

JAMBS & MULLIONS **WITHOUT** INTERMEDIATE HORIZONTALS

NOMINAL DIMS.		JAMB 'J'		JAMB 'J1'		MULL 'M'		MULL 'M1'		MULL 'M2'	
WIDTH (W)	FRAME HEIGHT	POS. (+)	NEG. (-)	POS. (+)	NEG. (-)	POS. (+)	NEG. (-)	POS. (+)	NEG. (-)	POS. (+)	NEG. (-)
42"	84"	100.0	140.0	100.0	140.0	100.0	130.0	100.0	140.0	100.0	140.0
48"		100.0	140.0	100.0	140.0	100.0	130.0	100.0	140.0	100.0	140.0
54"		100.0	140.0	100.0	140.0	100.0	130.0	100.0	140.0	100.0	140.0
60"		100.0	140.0	100.0	140.0	100.0	130.0	100.0	140.0	100.0	140.0
66"		100.0	140.0	100.0	140.0	100.0	130.0	100.0	140.0	100.0	140.0
72"		100.0	140.0	100.0	140.0	-	-	100.0	140.0	100.0	140.0
78"		100.0	140.0	100.0	140.0	-	-	100.0	140.0	100.0	140.0
84"		100.0	140.0	100.0	140.0	-	-	100.0	140.0	100.0	140.0
42"	96"	100.0	140.0	100.0	140.0	100.0	130.0	100.0	140.0	100.0	140.0
48"		100.0	140.0	100.0	140.0	100.0	130.0	100.0	140.0	100.0	140.0
54"		100.0	140.0	100.0	140.0	100.0	130.0	100.0	140.0	100.0	140.0
60"		100.0	140.0	100.0	140.0	100.0	130.0	100.0	140.0	100.0	140.0
66"		100.0	140.0	100.0	140.0	-	-	100.0	140.0	100.0	140.0
72"		100.0	140.0	100.0	140.0	-	-	100.0	140.0	100.0	140.0
42"	108"	100.0	140.0	100.0	140.0	100.0	130.0	100.0	140.0	100.0	140.0
48"		100.0	140.0	100.0	140.0	100.0	130.0	100.0	140.0	100.0	140.0
54"		100.0	140.0	100.0	140.0	-	-	100.0	140.0	100.0	140.0
60"		100.0	140.0	100.0	140.0	-	-	100.0	140.0	100.0	140.0
66"		100.0	140.0	100.0	140.0	-	-	100.0	140.0	100.0	140.0
42"	120"	100.0	140.0	100.0	140.0	100.0	129.1	100.0	140.0	100.0	140.0
48"		100.0	140.0	100.0	140.0	100.0	114.4	100.0	140.0	100.0	140.0
54"		100.0	140.0	100.0	140.0	-	-	100.0	139.5	100.0	140.0
60"		100.0	140.0	100.0	140.0	-	-	100.0	127.7	100.0	140.0
42"	132"	100.0	140.0	100.0	140.0	-	-	-	-	100.0	140.0
48"		100.0	139.5	100.0	140.0	-	-	-	-	100.0	140.0
42"	144"	100.0	120.5	100.0	140.0	-	-	-	-	100.0	140.0
48"		100.0	106.5	100.0	140.0	-	-	-	-	100.0	135.0

INTERPOLATION BETWEEN WIDTHS OR HEIGHTS ALLOWED.

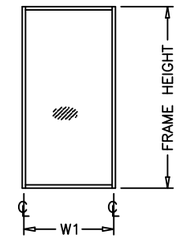

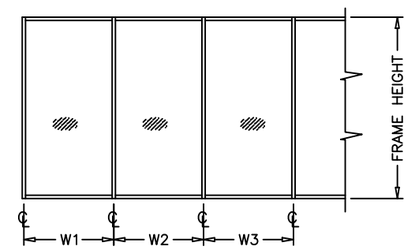

WIDTH (W) = W1
AT FRAME JAMB

WIDTH (W) = $\frac{W2 + W3}{2}$
AT FRAME MULLION

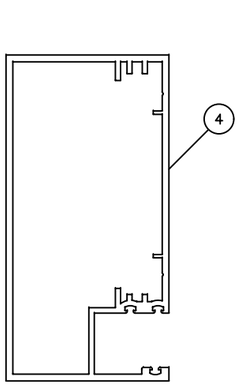

JAMB 'J'

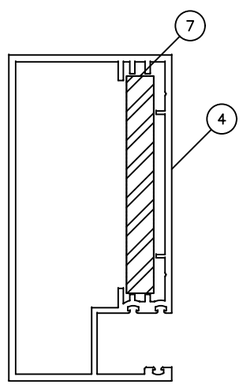

JAMB 'J1'

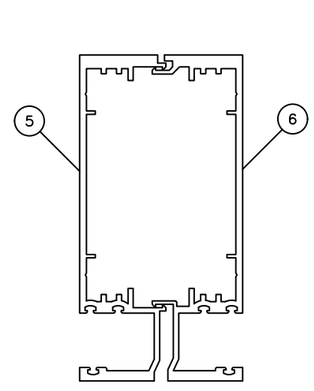

MULLION 'M'

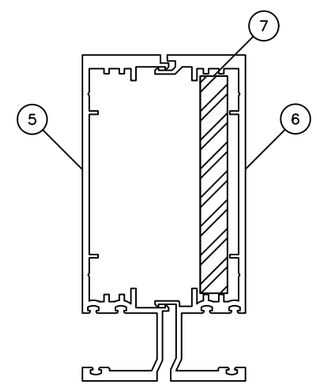

MULLION 'M1'

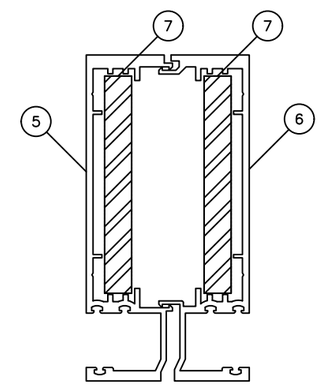

MULLION 'M2'

NOTE:
LOWER CAPACITY OF JAMBS 'J' OR 'J1' AND MULLION 'M', 'M1' OR 'M2'
SHALL CONTROL WHEN USED IN COMBINATION.

Revision:

PREPARED BY A. LYNN MILLER
1070 TECHNOLOGY DRIVE
N. VENICE, FL 34275
(941) 480-1600
REGISTRATION #29296

ECO window systems
ECO WINDOW SYSTEMS, LLC.
8502 N.W. 80th ST. MEDLEY, FL 33166
TEL. (305) 885-5299 FAX. (305) 885-5902

Series	Sheet	DWG No.	Drawn By	Date	Rev.
SERIES 1050	3 OF 9	WW1050FPA - SMI	A.M.	8/26/2022	A

Desc. JAMB AND MULLION CHART

Title SERIES 1050 ALUM. WINDOW WALL SYSTEM (S.M.I.)

ANTHONY LYNN MILLER
LICENSE
No. 58705
STATE OF FLORIDA
PROFESSIONAL ENGINEER
10/03/22

A. LYNN MILLER, P.E.
P.E.# 58705

JAMB & MULLION LOAD CAPACITY – PSF

JAMBS & MULLIONS **WITH** INTERMEDIATE HORIZONTALS

NOMINAL DIMS.		JAMB 'J'		JAMB 'J1'		MULL 'M'		MULL 'M1'		MULL 'M2'	
WIDTH (W)	FRAME HEIGHT	POS. (+)	NEG. (-)	POS. (+)	NEG. (-)	POS. (+)	NEG. (-)	POS. (+)	NEG. (-)	POS. (+)	NEG. (-)
42"	84"	100.0	140.0	100.0	140.0	100.0	130.0	100.0	140.0	100.0	140.0
48"		100.0	140.0	100.0	140.0	100.0	130.0	100.0	140.0	100.0	140.0
54"		100.0	140.0	100.0	140.0	100.0	130.0	100.0	140.0	100.0	140.0
60"		100.0	140.0	100.0	140.0	100.0	130.0	100.0	140.0	100.0	140.0
66"		100.0	140.0	100.0	140.0	100.0	130.0	100.0	140.0	100.0	140.0
72"		100.0	140.0	100.0	140.0	-	-	100.0	140.0	100.0	140.0
78"		100.0	140.0	100.0	140.0	-	-	100.0	140.0	100.0	140.0
84"		100.0	140.0	100.0	140.0	-	-	100.0	140.0	100.0	140.0
42"	96"	100.0	140.0	100.0	140.0	100.0	130.0	100.0	140.0	100.0	140.0
48"		100.0	140.0	100.0	140.0	100.0	130.0	100.0	140.0	100.0	140.0
54"		100.0	140.0	100.0	140.0	100.0	130.0	100.0	140.0	100.0	140.0
60"		100.0	140.0	100.0	140.0	100.0	130.0	100.0	140.0	100.0	140.0
66"		100.0	140.0	100.0	140.0	-	-	100.0	140.0	100.0	140.0
72"		100.0	140.0	100.0	140.0	-	-	100.0	140.0	100.0	140.0
42"	108"	100.0	140.0	100.0	140.0	100.0	130.0	100.0	140.0	100.0	140.0
48"		100.0	140.0	100.0	140.0	100.0	130.0	100.0	140.0	100.0	140.0
54"		100.0	140.0	100.0	140.0	-	-	100.0	140.0	100.0	140.0
60"		100.0	140.0	100.0	140.0	-	-	100.0	140.0	100.0	140.0
66"		100.0	140.0	100.0	140.0	-	-	100.0	131.7	100.0	140.0
42"	120"	100.0	140.0	100.0	140.0	100.0	124.0	100.0	140.0	100.0	140.0
48"		100.0	140.0	100.0	140.0	100.0	108.5	100.0	140.0	100.0	140.0
54"		100.0	140.0	100.0	140.0	-	-	100.0	130.3	100.0	140.0
60"		100.0	140.0	100.0	140.0	-	-	100.0	117.3	100.0	140.0
42"	132"	100.0	140.0	100.0	140.0	-	-	-	-	100.0	140.0
48"		100.0	132.6	100.0	140.0	-	-	-	-	100.0	140.0
42"	144"	100.0	116.7	100.0	140.0	-	-	-	-	100.0	140.0
48"		100.0	102.1	100.0	140.0	-	-	-	-	100.0	131.2

INTERPOLATION BETWEEN WIDTHS OR HEIGHTS ALLOWED.

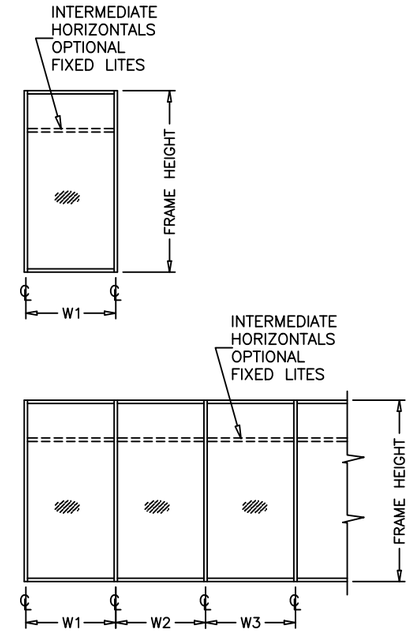

WIDTH (W) = W1
AT FRAME JAMB

WIDTH (W) = $\frac{W2 + W3}{2}$
AT FRAME MULLION

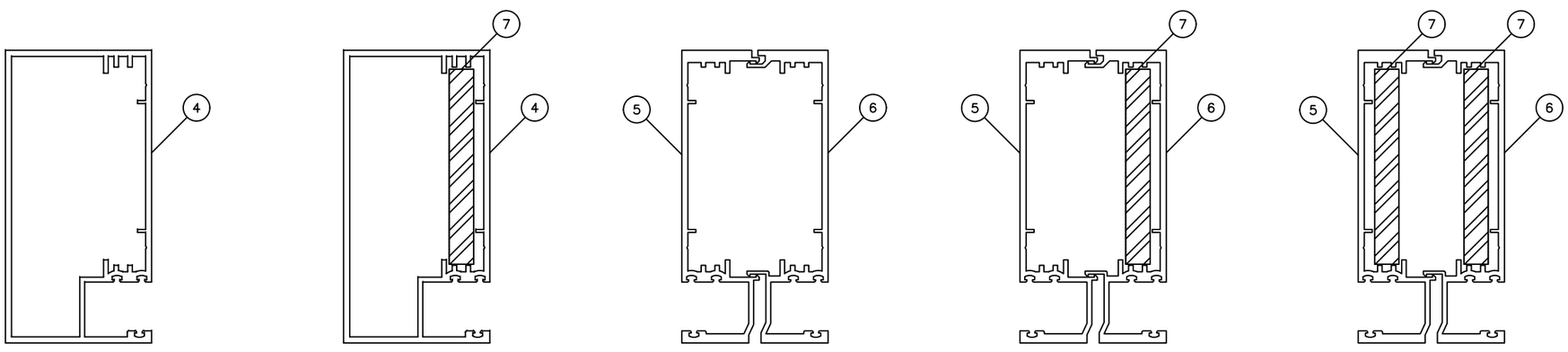

JAMB 'J' JAMB 'J1' MULLION 'M' MULLION 'M1' MULLION 'M2'

NOTE:
LOWER CAPACITY OF JAMBS 'J' OR 'J1' AND MULLION 'M', 'M1' OR 'M2'
SHALL CONTROL WHEN USED IN COMBINATION.

Revision:

PREPARED BY A. LYNN MILLER
1070 TECHNOLOGY DRIVE
N. VENICE, FL 34275
(941) 480-1600
REGISTRATION #29296

ECO window systems
ECO WINDOW SYSTEMS, LLC.
8502 N.W. 80th ST. MEDLEY, FL 33166
TEL. (305) 885-5299 FAX. (305) 885-5902

Series	Sheet	DWG No.	Drawn By	Date	Rev.
SERIES 1050	4 OF 9	WW1050FPA - SMI	A.M.	8/26/2022	A

Title: SERIES 1050 ALUM. WINDOW WALL SYSTEM (S.M.I.)
Desc.: JAMB AND MULLION CHART CONT.

ANTHONY LYNN MILLER
LICENSE
No. 58705
STATE OF FLORIDA
PROFESSIONAL ENGINEER
10/03/22

A. LYNN MILLER, P.E.
P.E.# 58705

HEAD/SILL ANCHOR DESIGN LOAD CAPACITY – PSF

POS.(+) & NEG.(-)

NOMINAL DIMS.		ANCHOR TYPE 'A'			ANCHOR TYPE 'B' & 'C'		
WIDTH (W)	FRAME HEIGHT	A3	A4	A5	B3/C3	B4/C4	B5/C5
42"	84"	132.2	140.0	140.0	140.0	140.0	140.0
48"		115.7	140.0	140.0	140.0	140.0	140.0
54"		102.9	137.1	140.0	140.0	140.0	140.0
60"		92.6	123.4	140.0	133.7	140.0	140.0
66"		84.2	112.2	140.0	121.6	140.0	140.0
72"		77.1	102.9	128.6	111.4	140.0	140.0
78"		71.2	94.*	118.7	120.9	137.1	140.0
84"		66.1	88.2	110.2	95.5	127.3	140.0
42"	96"	115.7	140.0	140.0	140.0	140.0	140.0
48"		101.3	135.0	140.0	140.0	140.0	140.0
54"		90.0	120.0	140.0	130.0	140.0	140.0
60"		81.0	108.0	135.0	117.0	140.0	140.0
66"		73.6	98.2	122.7	106.4	140.0	140.0
72"		67.5	90.0	112.5	97.5	130.0	140.0
42"	108"	102.9	137.1	140.0	140.0	140.0	140.0
48"		90.0	120.0	140.0	130.0	140.0	140.0
54"		80.0	106.7	133.3	115.7	140.0	140.0
60"		72.0	96.0	120.0	104.0	138.7	140.0
66"		65.5	87.3	109.1	94.5	126.1	140.0
42"	120"	92.6	123.4	140.0	133.7	140.0	140.0
48"		81.0	108.0	135.0	117.0	140.0	140.0
54"		72.0	96.0	120.0	104.0	138.7	140.0
60"		64.8	86.4	108.0	93.6	124.8	140.0
42"	132"	84.2	112.2	140.0	121.6	140.0	140.0
48"		73.6	98.2	122.7	106.4	140.0	140.0
42"	144"	77.1	102.9	128.6	111.4	140.0	140.0
48"		67.5	90.0	112.5	97.5	130.0	140.0

INTERPOLATION BETWEEN WIDTHS OR HEIGHTS ALLOWED.

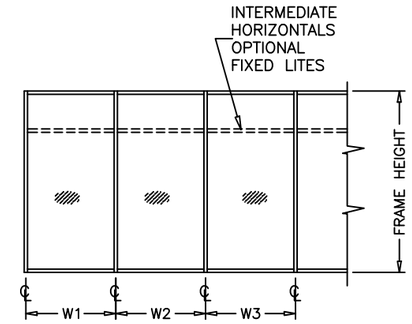

WIDTH (W) = W1
AT FRAME JAMB

WIDTH (W) = $\frac{W2 + W3}{2}$
AT FRAME MULLION

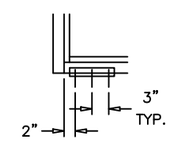

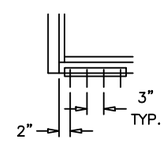

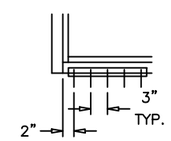

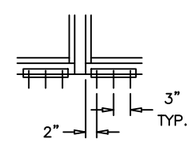

A3, B3, C3

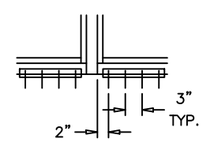

A4, B4, C4

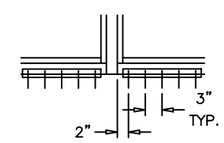

A5, B5, C5

ANCHORS TYPES: SEE SHEET 6 FOR DESCRIPTION

A3 = (3) ANCHORS TYPE 'A' AT EACH SIDE OF JAMB AND MULLION
B3 = (3) ANCHORS TYPE 'B' AT EACH SIDE OF JAMB AND MULLION
C3 = (3) ANCHORS TYPE 'C' AT EACH SIDE OF JAMB AND MULLION

A4 = (4) ANCHORS TYPE 'A' AT EACH SIDE OF JAMB AND MULLION
B4 = (4) ANCHORS TYPE 'B' AT EACH SIDE OF JAMB AND MULLION
C4 = (4) ANCHORS TYPE 'C' AT EACH SIDE OF JAMB AND MULLION

A5 = (5) ANCHORS TYPE 'A' AT EACH SIDE OF JAMB AND MULLION
B5 = (5) ANCHORS TYPE 'B' AT EACH SIDE OF JAMB AND MULLION
C5 = (5) ANCHORS TYPE 'C' AT EACH SIDE OF JAMB AND MULLION

Revision:

PREPARED BY A. LYNN MILLER
1070 TECHNOLOGY DRIVE
N. VENICE, FL 34275
(941) 480-1600
REGISTRATION #29296

ECO window systems
ECO WINDOW SYSTEMS, LLC.
8502 N.W. 80th ST. MEDLEY, FL 33166
TEL. (305) 885-5299 FAX. (305) 885-5902

Series	Sheet	DWG No.	Rev.
SERIES 1050	5 OF 9	WW1050FPA - SMI	A

Title	Desc.	Drawn By	Date
SERIES 1050 ALUM. WINDOW WALL SYSTEM (S.M.I.)	ANCHOR SPACING AND CAPACITIES	A.M.	8/26/2022

ANTHONY LYNN MILLER
LICENSE
No. 58705
10/03/22
STATE OF FLORIDA
PROFESSIONAL ENGINEER

A. LYNN MILLER, P.E.
P.E.# 58705

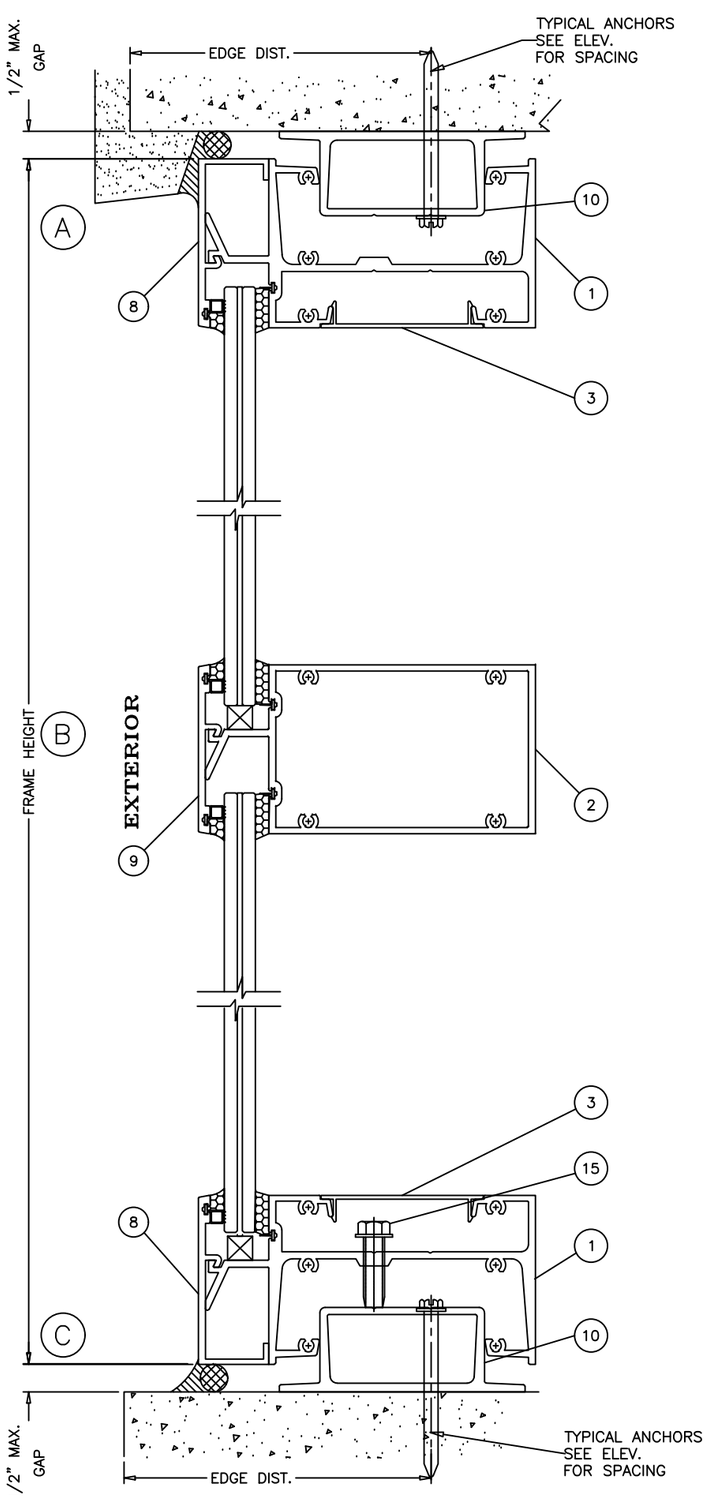

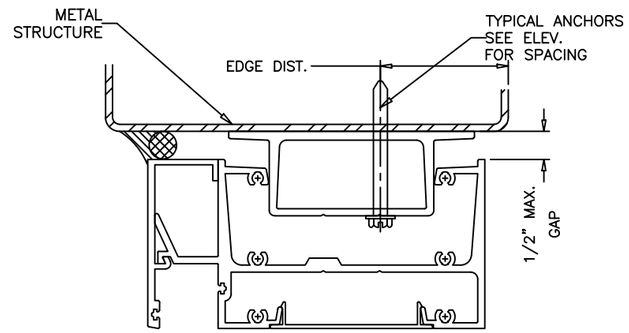

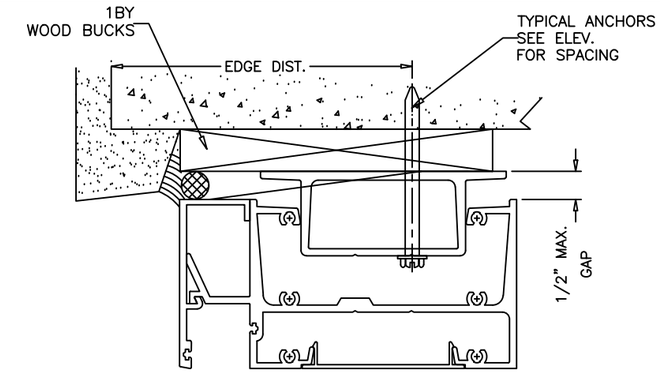

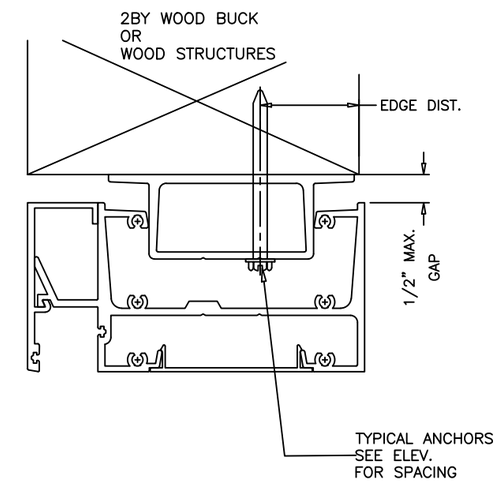

1BY OR 2BY WOOD BUCKS AND METAL STRUCTURE NOT BY 'ECO WINDOWS' MUST SUSTAIN LOADS IMPOSED BY GLAZING SYSTEM AND TRANSFER THEM TO THE BUILDING STRUCTURE.

TYPICAL ANCHORS: SEE ELEV. FOR SPACING

TYPE 'A'

1/4" DIA ULTRACON+ BY 'DEWALT' (Fu=177 KSI, Fy=155 KSI)
INTO 2BY WOOD BUCKS OR WOOD STRUCTURES
1-1/2" MIN. PENETRATION INTO WOOD

THRU 1BY WOOD BUCKS INTO CONCRETE
1-3/4" MIN. EMBED INTO CONCRETE

TYPE 'B'

1/4" DIA ULTRACON BY 'DEWALT' (Fu=177 KSI, Fy=155 KSI)
INTO WOOD STRUCTURES
DIRECTLY INTO CONCRETE OR BLOCKS
1-3/4" MIN. EMBED INTO CONCRETE OR BLOCKS

TYPE 'C'

#14 SMS OR SELF DRILLING SCREWS ST/ST (GRADE 2 CRS)
INTO FBC APPROVED MULLIONS
OR
INTO METAL STRUCTURES
(3) THREADS MIN. PENETRATION BEYOND SUBSTRATE
STEEL : 1/8" THK. MIN. (Fy = 36 KSI MIN.)
ALUMINUM : 1/8" THK. MIN. (6063-T5 MIN.)
(STEEL IN CONTACT WITH ALUMINUM TO BE PLATED OR PAINTED)

ANCHOR EDGE DISTANCES

INTO CONCRETE = 2-1/2" MIN.
INTO WOOD STRUCTURE = 1" MIN.
INTO METAL STRUCTURE = 3/4" MIN.

WOOD AT HEAD, SILL OR JAMBS SG = 0.55 MIN.
CONCRETE AT HEAD, SILL OR JAMBS f'c = 3000 PSI MIN.
C-90 HOLLOW/FILLED BLOCK AT JAMBS f'm = 2000 PSI MIN.

Revision:

PREPARED BY A. LYNN MILLER
1070 TECHNOLOGY DRIVE
N. VENICE, FL 34275
(941) 480-1600
REGISTRATION #29296

ECO window systems
ECO WINDOW SYSTEMS, LLC.
8502 N.W. 80th ST. MEDLEY, FL 33166
TEL. (305) 885-5299 FAX. (305) 885-5902

Series	Desc.	Sheet	DWG No.	Drawn By	Date	Rev.
SERIES 1050	VERTICAL SECTION DETAIL & ANCHOR SPECIFICATIONS	6 OF 9	WW1050FPA - SMI	A.M.	8/26/2022	A

Title: SERIES 1050 ALUM. WINDOW WALL SYSTEM (S.M.I.)

ANTHONY LYNN MILLER
LICENSE
No. 58705
STATE OF FLORIDA
PROFESSIONAL ENGINEER
10/03/22

A. LYNN MILLER, P.E.
P.E.# 58705

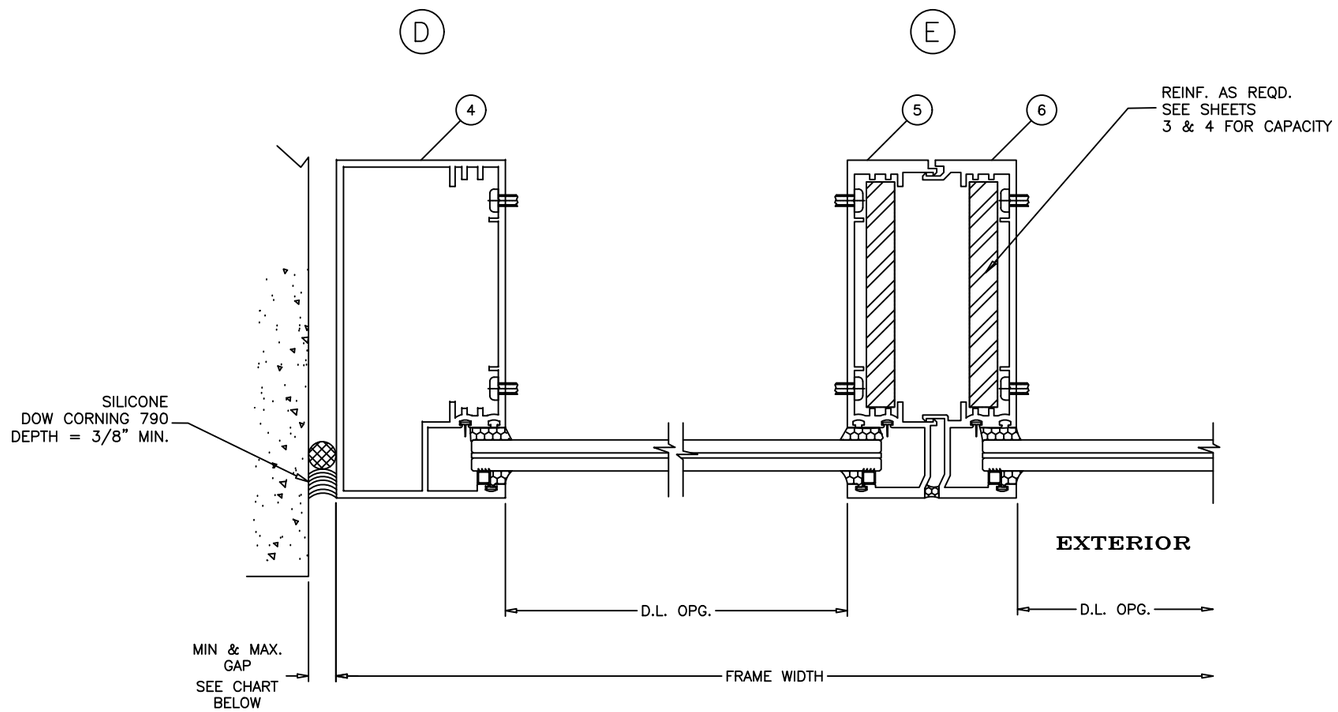

MAX. FRAME HEIGHT UP TO	GAPS FOR UNANCHORED JAMBS	
	MIN.	MAX.
78"	1/4"	3/4"
96"	5/16"	3/4"
120"	3/8"	3/4"
144"	1/2"	3/4"

NOTE:
MAX. MOVEMENT CONSIDERED=100% STRETCH.
PLEASE REFER TO SEALANT MANUFACTURER'S DATA AND APPLICATION MANUAL FOR COMPATIBILITY OF SEALANT TO SUBSTRATE & WINDOW WALL MATERIAL/FINISH AND COMPLIANCE FOR WARRANTY.
REFER TO ACI–117–10 FOR CONSTRUCTION TOLERANCES.

ALTERNATE SEALANTS AT JAMB GAPS CAN BE DESIGNED BY ENGINEER OF RECORD BASED ON MANUFACTURER GUIDE LINES.

GAPS LESS THAN 1/4" MAY BE DESIGNED BY ENGINEER OF RECORD BY THE USE OF BOND BREAKER TAPE OR 15% OF GAP ALLOWED MOVEMENT.

Revision:

PREPARED BY A. LYNN MILLER
1070 TECHNOLOGY DRIVE
N. VENICE, FL 34275
(941) 480-1600
REGISTRATION #29296

ECO window systems
ECO WINDOW SYSTEMS, LLC.
8502 N.W. 80th ST. MEDLEY, FL 33166
TEL. (305) 885-5299 FAX. (305) 885-5902

Series	Desc.	Sheet	DWG No.	Rev.
SERIES 1050	UNSECURED JAMB HORIZONTAL DETAILS	7 OF 9	WW1050FPA - SMI	A

Title: SERIES 1050 ALUM. WINDOW WALL SYSTEM (S.M.I.)

Drawn By: A.M.

Date: 8/26/2022

ANTHONY LYNN MILLER
LICENSE
No. 58705
STATE OF FLORIDA
PROFESSIONAL ENGINEER

A. Lynn Miller
10/03/22

A. LYNN MILLER, P.E.
P.E.# 58705

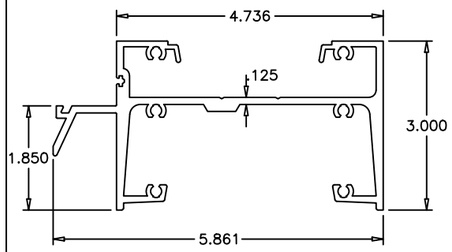

1 FRAME HEAD/SILL

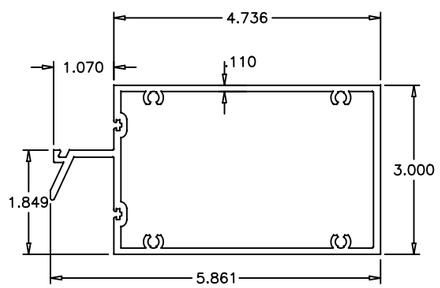

2 INTERMEDIATE HORIZONTAL

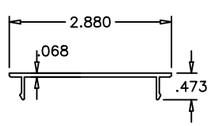

3 HEAD/SILL COVER

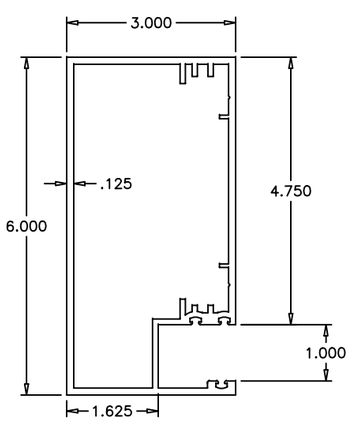

4 FRAME JAMB

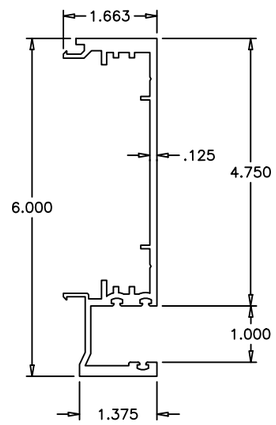

5 MALE MULLION

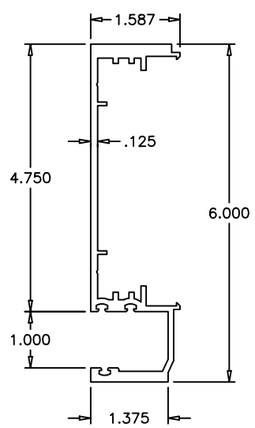

6 FEMALE MULLION

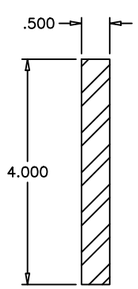

7 MULLION REINF

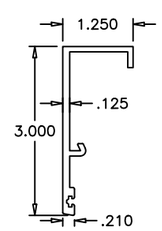

8 HEAD/SILL CAP

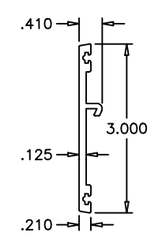

9 HORIZONTAL CAP

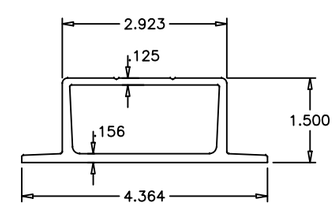

10 ANCHOR BASE

ITEM NO.	PART NUMBER	QUANTITY	DESCRIPTION	MATERIAL	MANF./SUPPLIER/REMARKS
1	E1055	AS REQD.	FRAME HEAD/SILL	6063–T6	–
2	E1053	AS REQD.	INTERMEDIATE HORIZONTAL	6063–T6	–
3	E1058	AS REQD.	HEAD/SILL COVER	6063–T6	–
4	E1024	AS REQD.	FRAME JAMB	6063–T6	–
5	E1052	AS REQD.	MALE MULLION	6063–T6	–
6	E1051	AS REQD.	FEMALE MULLION	6063–T6	–
7	–	AS REQD.	MULLION REINF.	STEEL	–
8	E1056	AS REQD.	HEAD/SILL CAP	6063–T6	–
9	E1057	AS REQD.	HORIZONTAL CAP	6063–T6	–
10	E1059	AS REQD.	ANCHOR BASE	6063–T6	–
11	–	4/ LITE	INTERIOR GLASS SPACER	EPDM	DUROMETER 80±5 SHORE A
12	E1061	4/ LITE	SILICONE DAM	EPDM	DUROMETER 80±5 SHORE A
13	–	2/ LITE.	SETTING BLOCK, AT 1/4 POINTS (LAM. GLASS)	EPDM	DUROMETER 80±5 SHORE A
14	#12 X 1–1/4"	AS REQD.	ASSEMBLY FASTENERS	ST/ST	PH SMS
15	5/16" MACH. BOLT	2/ LITE	LEVELING SCREW	ST/ST	–

Revision:

PREPARED BY A. LYNN MILLER
1070 TECHNOLOGY DRIVE
N. VENICE, FL 34275
(941) 480-1600
REGISTRATION #29296

ECO window systems
ECO WINDOW SYSTEMS, LLC.
8502 N.W. 80th ST. MEDLEY, FL 33166
TEL. (305) 885-5299 FAX. (305) 885-5902

Title	Date
SERIES 1050 ALUM. WINDOW WALL SYSTEM (S.M.I.)	8/26/2022

Desc.	Drawn By
BOM & EXTRUSION PROFILES	A.M.

Series	Sheet	DWG No.	Rev.
SERIES 1050	8 OF 9	WW1050FPA - SMI	A

ANTHONY LYNN MILLER
LICENSE
No. 58705
STATE OF FLORIDA
PROFESSIONAL ENGINEER
10/03/22

A. LYNN MILLER, P.E.
P.E.# 58705

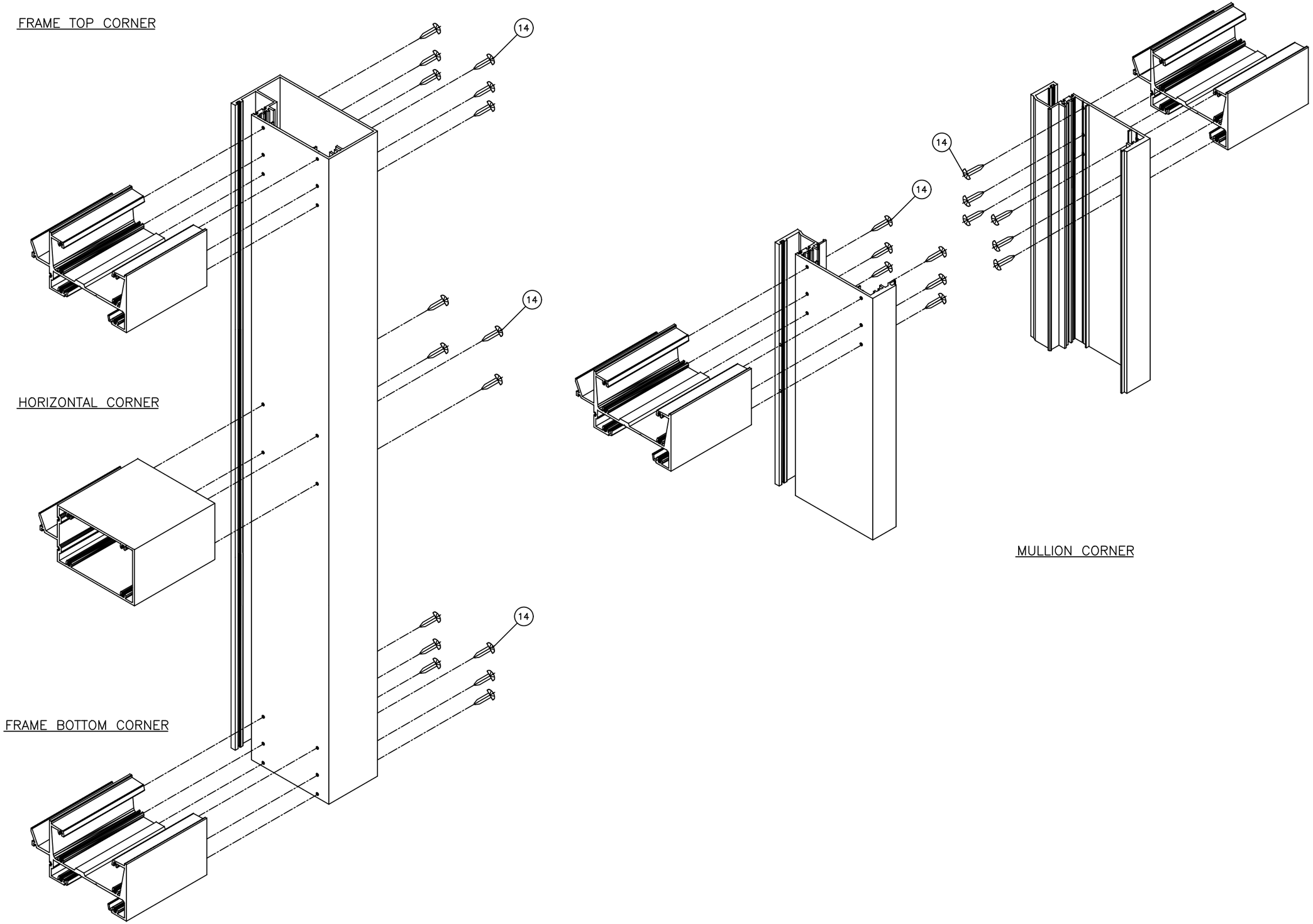

Revision:

PREPARED BY A. LYNN MILLER
1070 TECHNOLOGY DRIVE
N. VENICE, FL 34275
(941) 480-1600
REGISTRATION #29296

ECO window systems
ECO WINDOW SYSTEMS, LLC.
8502 N.W. 80th ST. MEDLEY, FL 33166
TEL. (305) 885-5299 FAX. (305) 885-5902

Title	SERIES 1050 ALUM. WINDOW WALL SYSTEM (S.M.I.)
Desc.	CORNER ASSEMBLY DETAILS
Drawn By	A.M.
Date	8/26/2022
Series	SERIES 1050
Sheet	9 OF 9
DWG No.	WW1050FPA - SMI
Rev.	A

ANTHONY LYNN MILLER
LICENSE
No. 58705
10/03/22
STATE OF
FLORIDA
PROFESSIONAL ENGINEER

A. LYNN MILLER, P.E.
P.E.# 58705